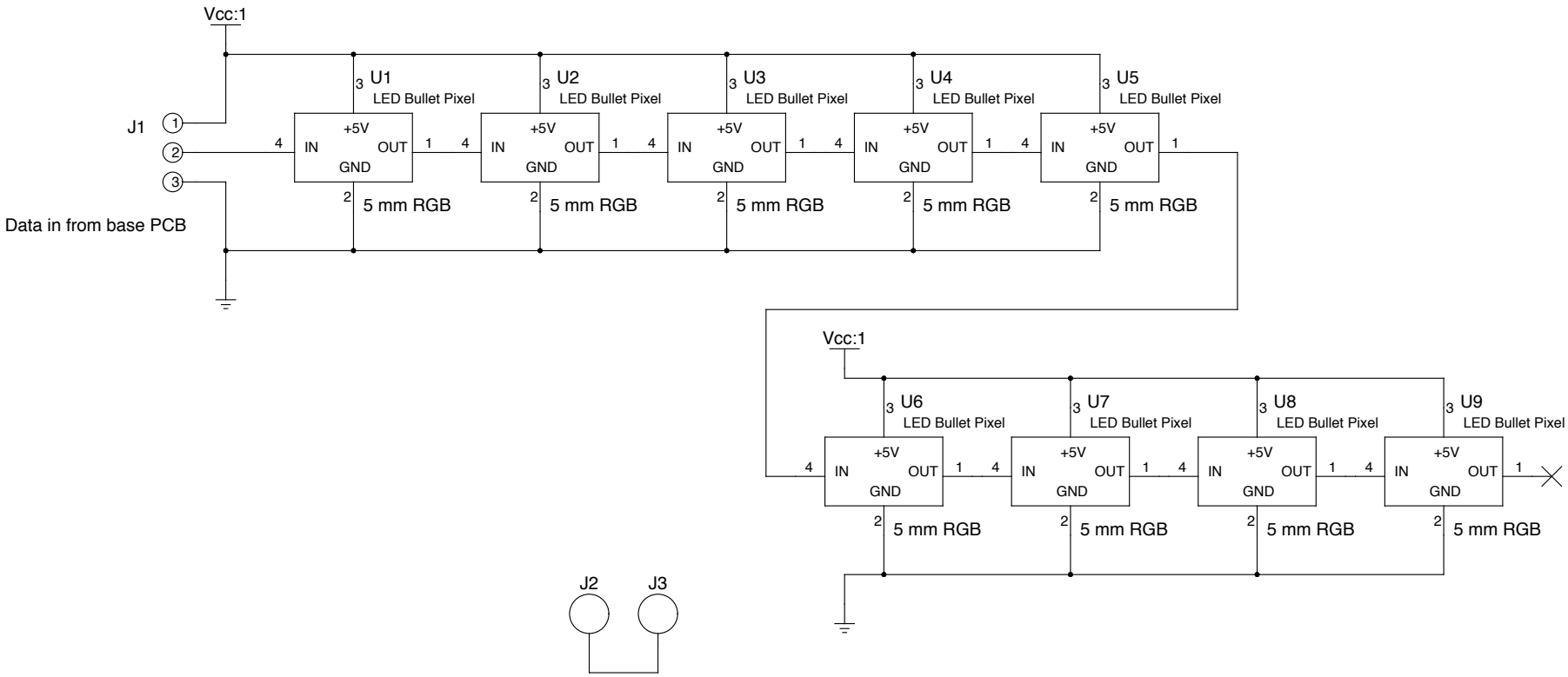

Copyright 2014; CC–BY–SA–3.0 License.

Evil Mad Scientist Laboratories / Evil Mad Science LLC	
TITLE USB Powered Multicolor Menorah –– Display Board	
FILE: mm9A.sch	REVISION: A
PAGE 1 OF 1	DRAWN BY: Windell H. Oskay